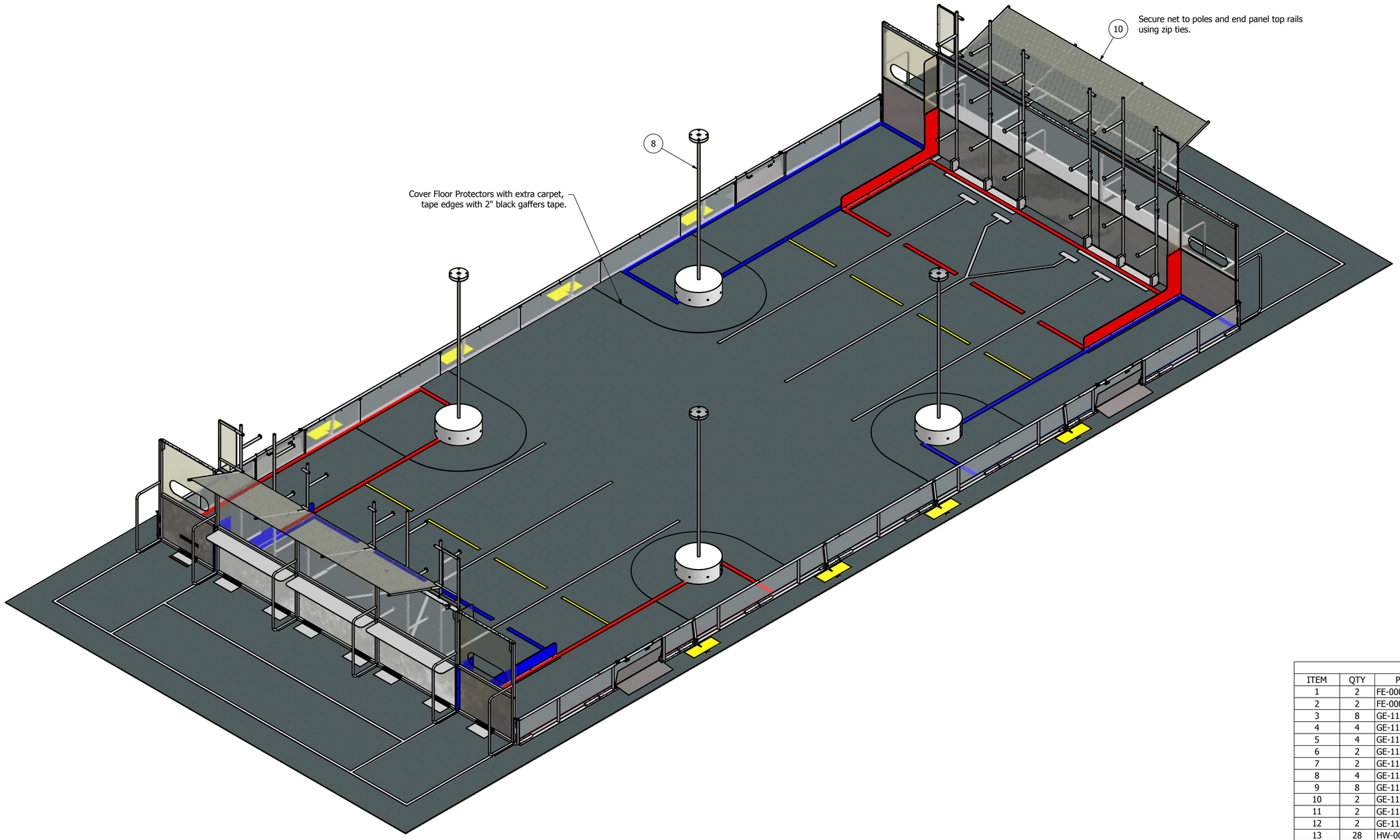

PARTS LIST			
ITEM	QTY	PART NUMBER	DESCRIPTION
1	2	FE-00034-01	Side Border Sub-Assembly (Sheet 3)
2	2	FE-00034-02	End Panel Sub Assembly (Sheet 4)
3	8	GE-11000	Outer Pole Assembly
4	4	GE-11003	Middle Pole Assembly
5	4	GE-11020	Baseplate, Hangers
6	2	GE-11021	Mounting Angle Left
7	2	GE-11022	Mounting Angle Right
8	4	GE-11049	Tower Assembly
9	8	GE-11051	Net Support
10	2	GE-11055	Net
11	2	GE-11060 (right version)	Guard
12	2	GE-11060 (left version)	Guard
13	28	HW-00011	1/4-20 Wing Nut
14	28	HW-00063	Hex head bolt 1/4-20 x 2.50"
15	8	GE-10055	Clip, Ball Return
16	8	HW-00005	Retainer pin 1/4" x 2-1/2" long (MSC #: 67973081)

DRAWN Derek Foster	1/5/2010	**FIRST** 200 Bedford Street, Manchester, NH 03101 (603) 666-3906 -- FAX (603) 666-3907
CHECKED		
UNLESS OTHERWISE SPECIFIED **TOLERANCES: (INCHES)**		TITLE 2011 Arena Layout and Marking
FRAC.	+/- 1/32	
.00	+/- .01	SIZE D / DWG NO FE-00034 / REV
.000	+/- .005	
ANGULAR	+/- .25 Deg.	SCALE / SHEET 1 OF 5

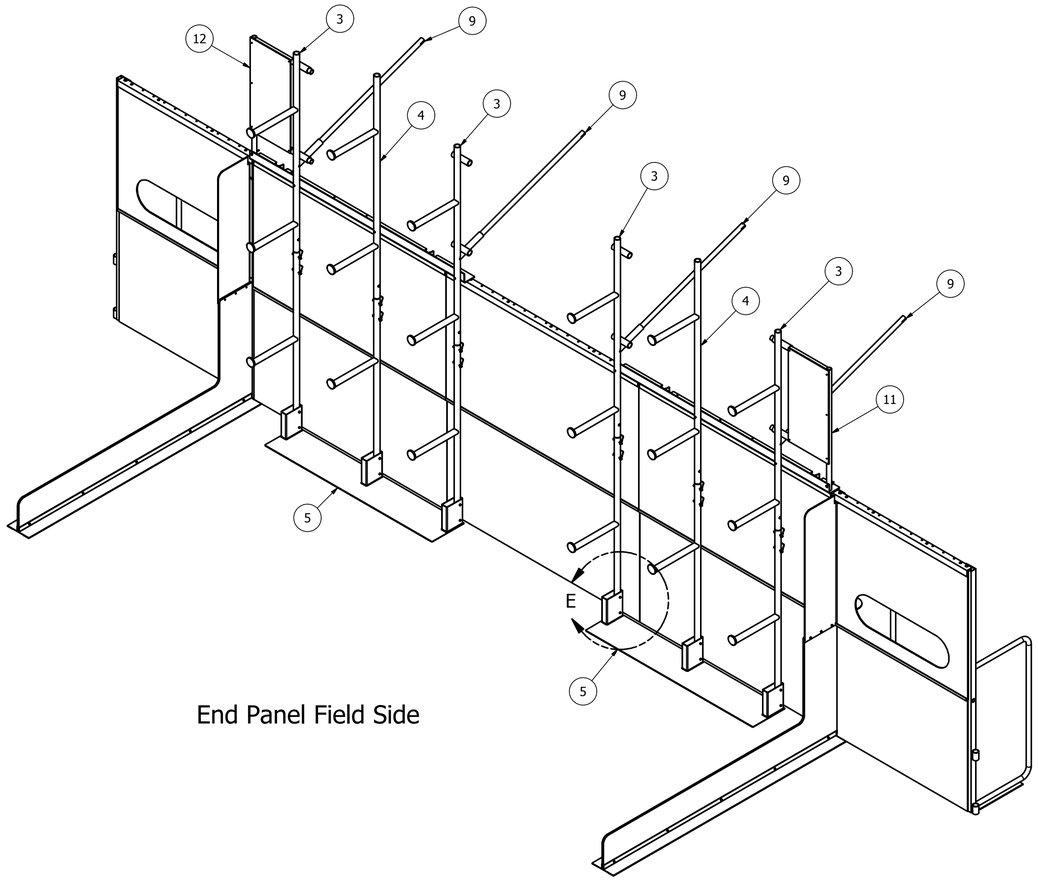

End Panel Field Side

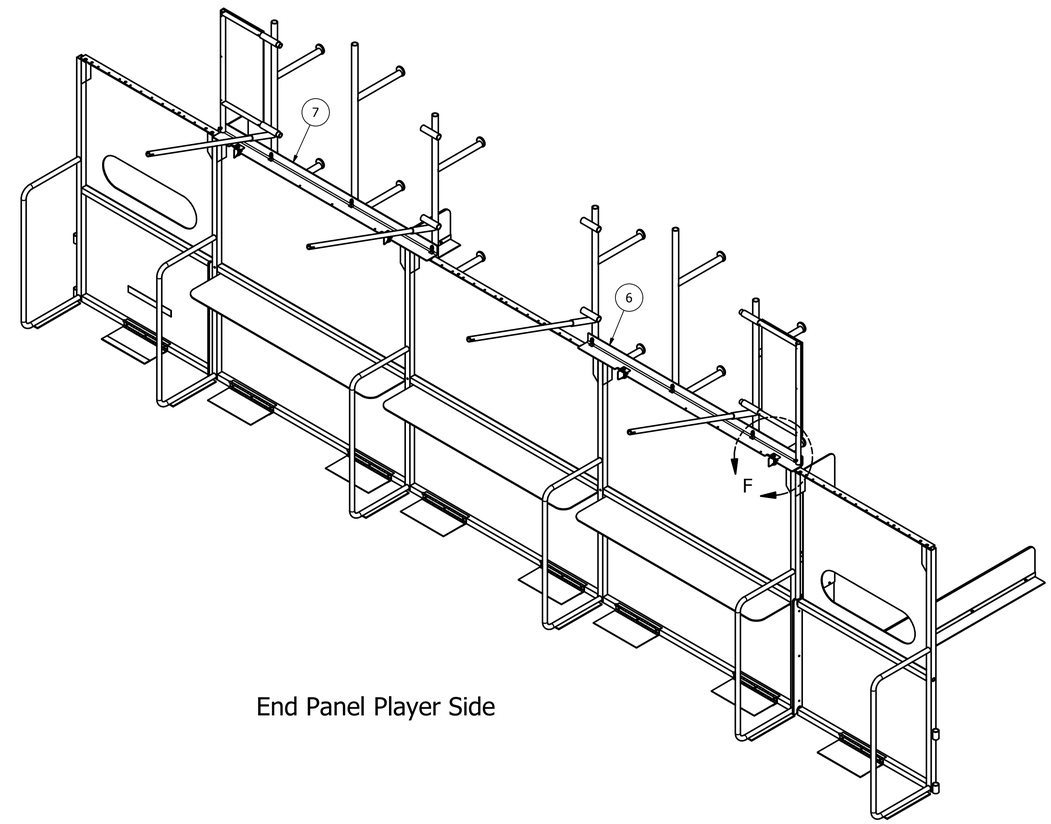

End Panel Player Side

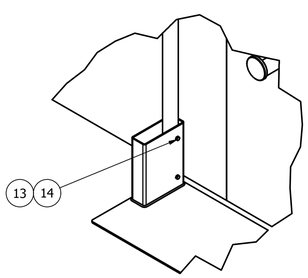

DETAIL E
SCALE 1/8

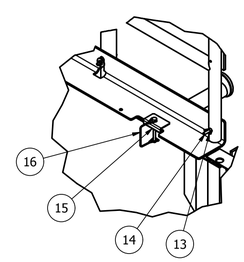

DETAIL F
SCALE 1/8

DRAWN Derek Foster	1/5/2010	**FIRST** 200 Bedford Street, Manchester, NH 03101 (603) 666-3906 -- FAX (603) 666-3907
CHECKED		
UNLESS OTHERWISE SPECIFIED **TOLERANCES: (INCHES)**		TITLE 2011 Arena Layout and Marking
FRAC.	+/- 1/32	
.00	+/- .01	SIZE D / DWG NO FE-00034 / REV
.000	+/- .005	
ANGULAR	+/- .25 Deg.	SCALE / SHEET 2 OF 5

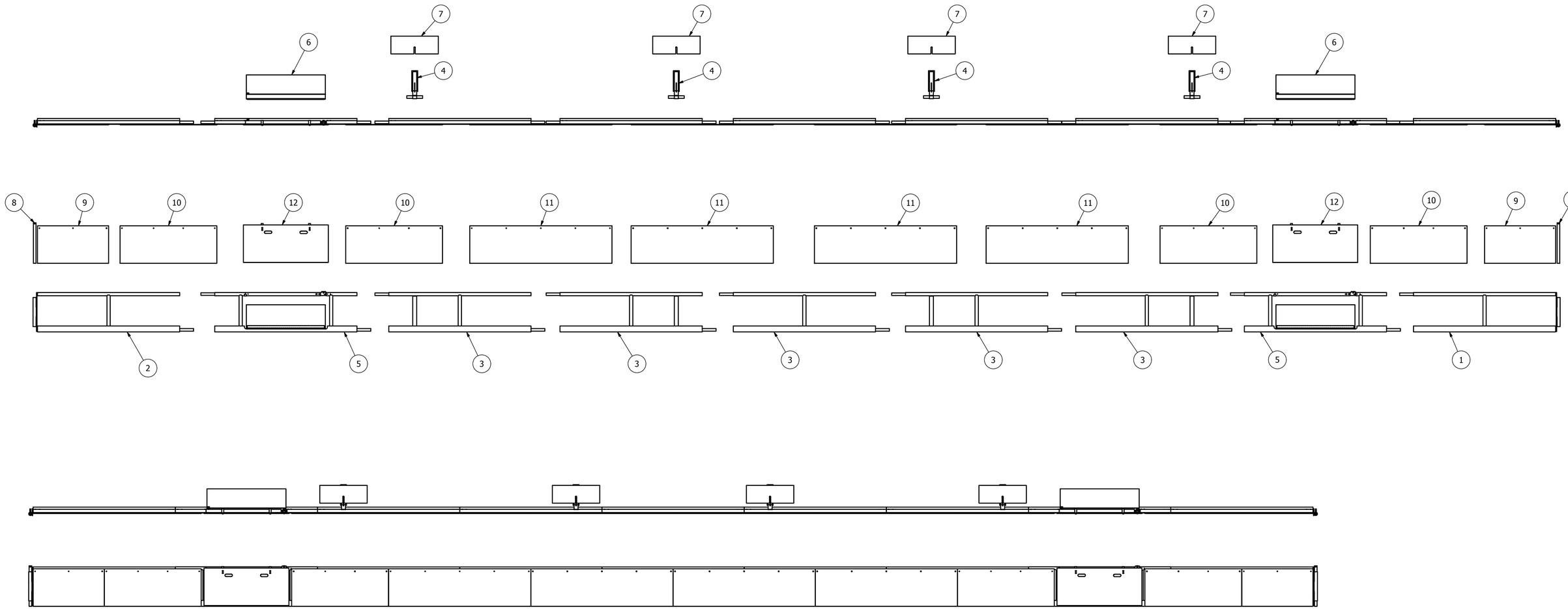

Side Border Assembly, Typical both sides of field.

Note: Quantities are for one field border assembly.

PARTS LIST			
ITEM	QTY	PART NUMBER	DESCRIPTION
1	1	FE-00024	Field Rail Assy - Right
2	1	FE-00023	Field Rail Assy - Left
3	5	FE-00022	Field Rail Assy - Mid
4	4	FE-00013	Field Outrigger
5	2	FE-00029	Field Gate, Assembly
6	2	FE-00014	Field Entry Ramp
7	4	FE-00015	Trip Guard
8	2	FE-00003	Rail Pin Assy
9	2	FE-00008	Field Plastic "A"
10	4	FE-00009	Field Plastic "B"
11	4	FE-00010	Field Plastic "C"
12	2	FE-00017	Gate Plastic Assembly

DRAWN Derek Foster 1/5/2010
CHECKED

UNLESS OTHERWISE SPECIFIED
TOLERANCES: (INCHES)

FRAC.	+/- 1/32
.00	+/- .01
.000	+/- .005
ANGULAR	+/- .25 Deg.

FIRST
200 Bedford Street, Manchester, NH 03101
(603) 666-3906 -- FAX (603) 666-3907

TITLE
2011 Arena Layout and Marking

SIZE D | DWG NO FE-00034 | REV
SCALE | SHEET 3 OF 5

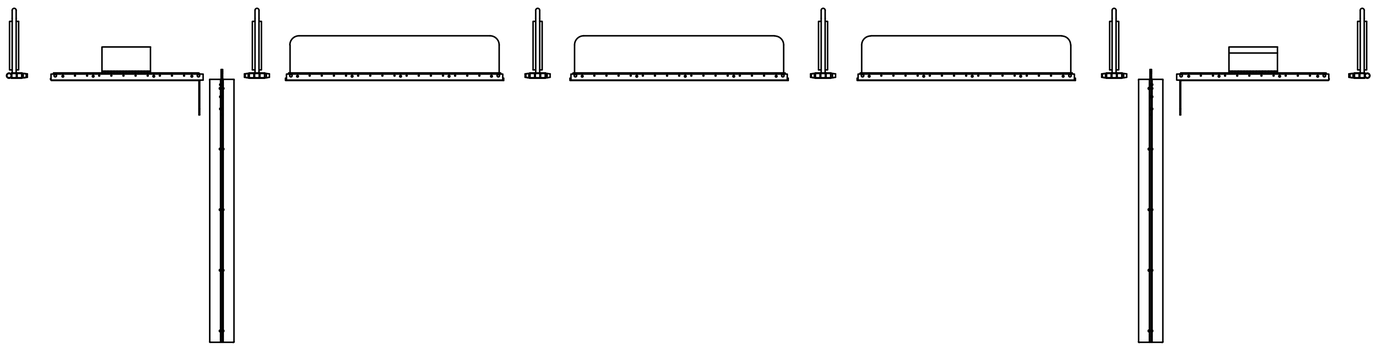

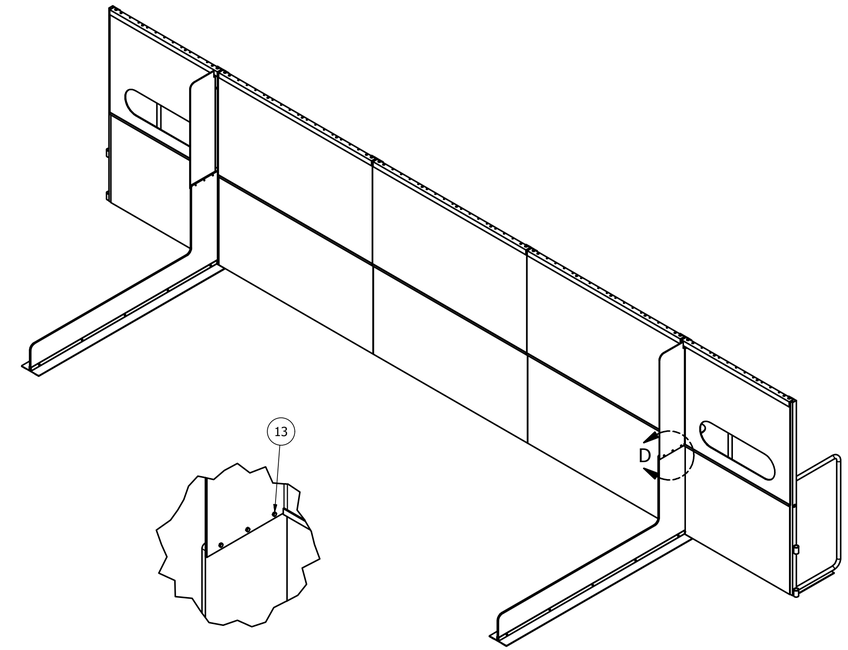

DETAIL D
SCALE 1/8

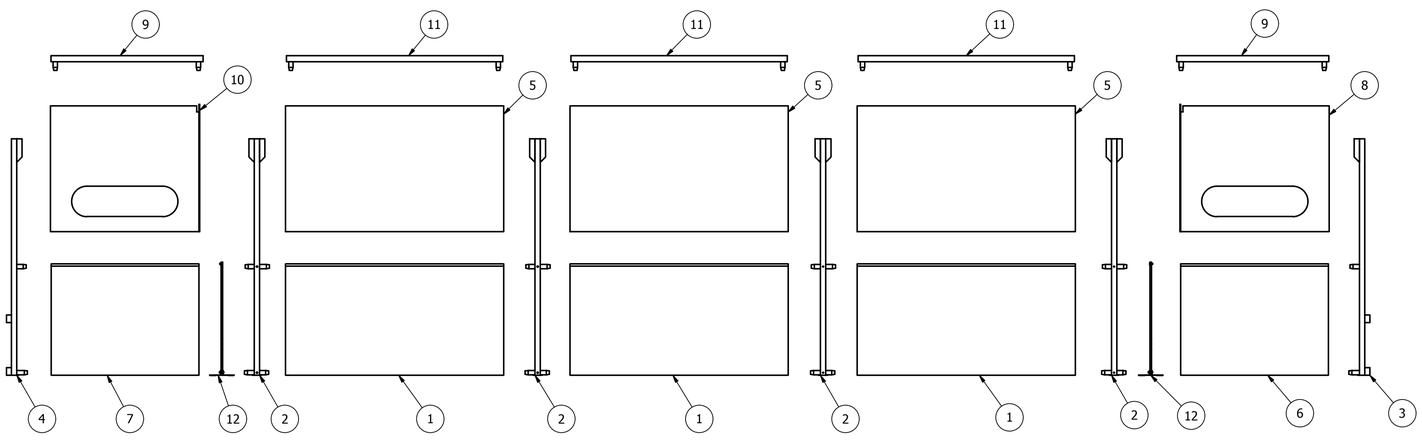

Note: Quantities are for one end panel assembly.

PARTS LIST			
ITEM	QTY	PART NUMBER	DESCRIPTION
1	3	FE-00004	End Panel
2	4	FE-00001	Driver's Station Support Assy
3	1	FE-00002 (right version)	Corner Support
4	1	FE-00002 (left version)	Corner Support
5	3	FE-00012	Drivers Station Acrylic
6	1	GE-11041 (right version)	Modified End Panel Corner
7	1	GE-11041 (left version)	Modified End Panel Corner
8	1	GE-11027	Corner Plastic Right
9	2	GE-09031	Top Rail - Corner
10	1	GE-11028	Corner Glass Left
11	3	FE-00007	Field Top Rail Assy
12	2	GE-11025	Lane Divider Assembly
13	6	HW-00012	Hex head bolt 1/4-20 x .750"

End Panel Assembly - Typical Both Ends

DRAWN Derek Foster	1/5/2010	**FIRST** 200 Bedford Street, Manchester, NH 03101 (603) 666-3906 -- FAX (603) 666-3907
CHECKED		
UNLESS OTHERWISE SPECIFIED **TOLERANCES: (INCHES)**		TITLE 2011 Arena Layout and Marking
FRAC.	+/- 1/32	
.00	+/- .01	SIZE D / DWG NO FE-00034 / REV
.000	+/- .005	
ANGULAR	+/- .25 Deg.	SCALE / SHEET 4 OF 5

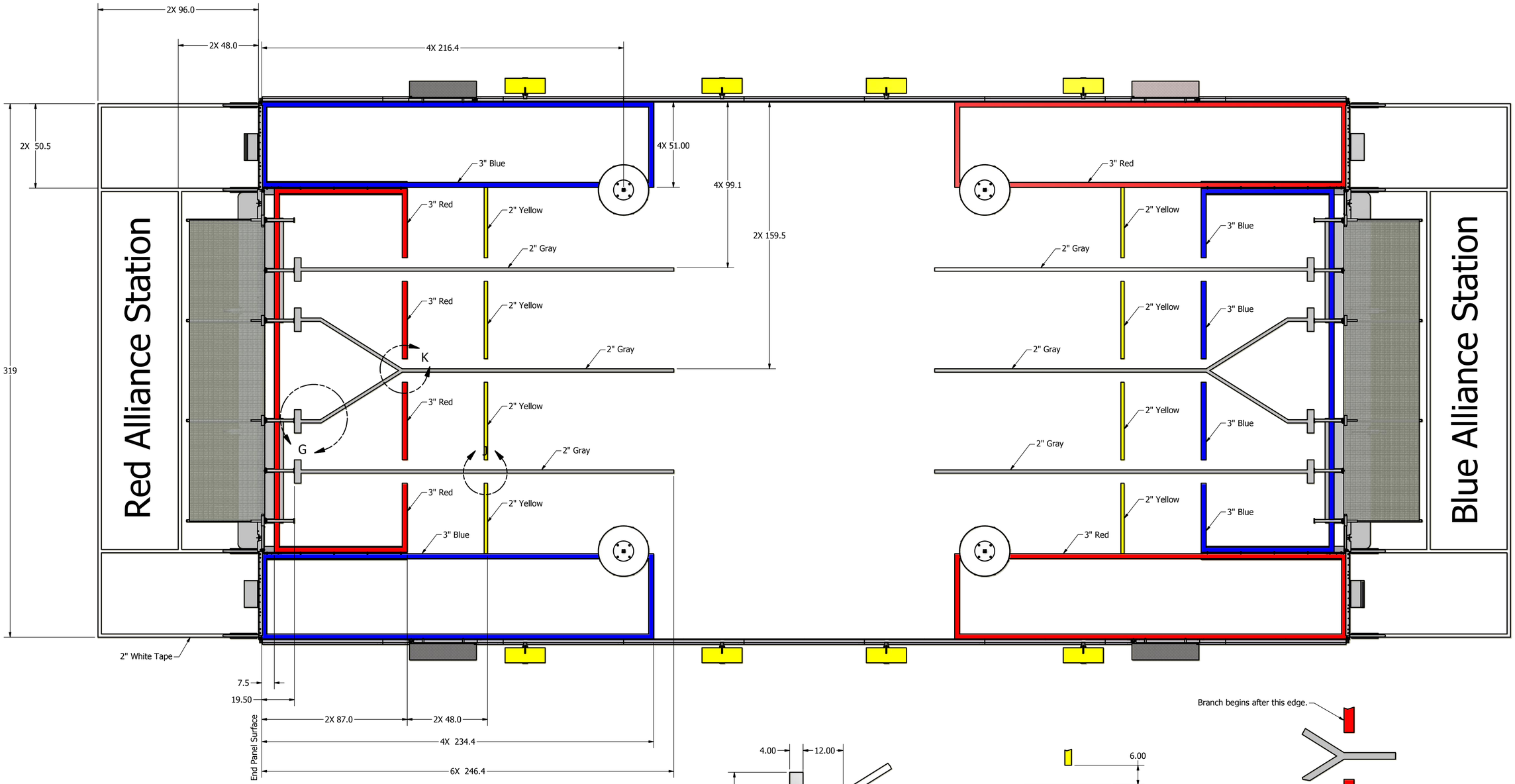

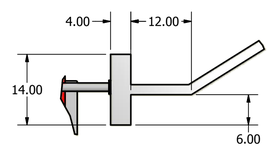

DETAIL G
SCALE 1 / 15

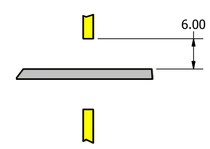

Gap Typical for all line breaks

DETAIL J
SCALE 1 / 15

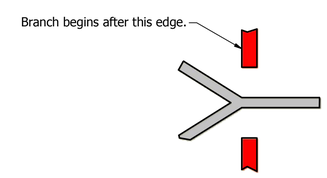

DETAIL K
SCALE 1 / 15

Notes:

1. All gaffers tape for field marking will be 2" wide white, unless otherwise noted.
3. All marking dimension nominal.

DRAWN Derek Foster	1/5/2010	**FIRST** 200 Bedford Street, Manchester, NH 03101 (603) 666-3906 -- FAX (603) 666-3907
CHECKED		
UNLESS OTHERWISE SPECIFIED TOLERANCES: (INCHES)		TITLE 2011 Arena Layout and Marking
FRAC.	+/- 1/32	
.00	+/- .01	SIZE D / DWG NO FE-00034 / REV
.000	+/- .005	
ANGULAR	+/- .25 Deg.	SCALE / SHEET 5 OF 5